327639 ✔ ACTIVE

PIDG

TE Internal #: 327639

Splices, 22 – 18 AWG / 12 – 10 AWG Wire Size, 2.62 – 6.64 mm² / .26 – .96 mm² Wire Size, Step Down, Copper, Yellow - Translucent, PIDG

View on TE.com >

Terminals & Splices > Splices > PIDG Stepdown Butt Splices

Wire Size: **.26 – .96 mm², 2.62 – 6.64 mm²**

Sealable: **No**

Splice Features: **Step Down**

Primary Product Material: **Copper**

All PIDG Stepdown Butt Splices (7)

Features

Product Type Features

Discrete Wire Type	Stranded
Splice Accessory Type	Splice
Sealable	No
Splice Type	Butt Splice
Serrated	Yes
Compatible With Discrete Wire Type	Solid, Stranded
Wire Insulation Support Retention Type	Insulation Support

Configuration Features

Number of Serrations	8
Compatible With Wire & Cable Type	Discrete Wire

Electrical Characteristics

Operating Voltage	300 V

Body Features

Insulation Sleeve Material	Nylon
Insulation Type	Pre-Insulated
Plating Material	Tin
Insulation Material	Nylon
Splice Features	Step Down
Primary Product Material	Copper
Primary Product Color	Yellow - Translucent

Contact Features

Contact Plating Material	Tin
Barrel Type	Closed

Mechanical Attachment

Wire Insulation Support	With

Dimensions

Inside Diameter (Recovered)	1.5 mm[.059 in]
Outside Diameter	5.64 mm[.222 in]
Wire Size	.26 – .96 mm², 2.62 – 6.64 mm²
Terminal Material Thickness	.51 mm[.02 in]
Overall Product Length	42.06 mm[1.656 in]

Usage Conditions

Insulation Option	Fully Insulated
Operating Temperature Range	105 °C[221 °F]

Operation/Application

Heavy Duty	No

Industry Standards

Government Qualified Splice	No

Packaging Features

Packaging Quantity	50
Packaging Method	Loose Piece

Other

Military Category	No

Product Compliance

For compliance documentation, visit the product page on TE.com>

EU RoHS Directive 2011/65/EU	Compliant
EU ELV Directive 2000/53/EC	Compliant
China RoHS 2 Directive MIIT Order No 32, 2016	No Restricted Materials Above Threshold
EU REACH Regulation (EC) No. 1907/2006	Current ECHA Candidate List: JUNE 2022 (224) Candidate List Declared Against: JUL 2021 (219) Does not contain REACH SVHC
Halogen Content	Low Halogen - Br, Cl, F, I < 900 ppm per homogenous material. Also BFR/CFR/PVC Free
Solder Process Capability	Not applicable for solder process capability

Product Compliance Disclaimer

This information is provided based on reasonable inquiry of our suppliers and represents our current actual knowledge based on the information they provided. This information is subject to change. The part numbers that TE has identified as EU RoHS compliant have a maximum concentration of 0.1% by weight in homogenous materials for lead, hexavalent chromium, mercury, PBB, PBDE, DBP, BBP, DEHP, DIBP, and 0.01% for cadmium, or qualify for an exemption to these limits as defined in the Annexes of Directive 2011/65/EU (RoHS2). Finished electrical and electronic equipment products will be CE marked as required by Directive 2011/65/EU. Components may not be CE marked. Additionally, the part numbers that TE has identified as EU ELV compliant have a maximum concentration of 0.1% by weight in homogenous materials for lead, hexavalent chromium, and mercury, and 0.01% for cadmium, or qualify for an exemption to these limits as defined in the Annexes of Directive 2000/53/EC (ELV). Regarding the REACH Regulation, the information TE provides on SVHC in articles for this part number is based on the latest European Chemicals Agency (ECHA) 'Guidance on requirements for substances in articles' posted at this URL: https://echa.europa.eu/guidance-documents/guidance-on-reach

Compatible Parts

TE Part # 59824-1
TETRA-CRIMP PIDG PG FASTON 22-10 ASSY

TE Part # 58433-3
PRO CR ASSY, RBY IS9252

TE Part # 59239-4
HHHT PIDG PG 12-10 ASSY

TE Part # 58423-1
DIE, RBY IS9252

TE Part # 539691-2
ERGO DIE R.B.Y

TE Part # 2063030-1
SDE DIESET, RBY, UL

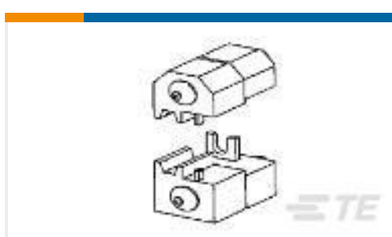

TE Part # 47808-6
DIES PIDG 12-10 DIE SET

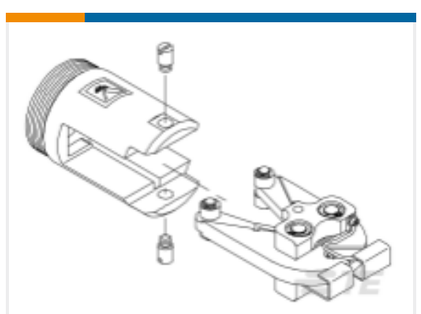

TE Part # 679300-1
1210 PIDG CRIMP HEAD

TE Part # 169400
CERTI-LOK FRAME W/O DIES

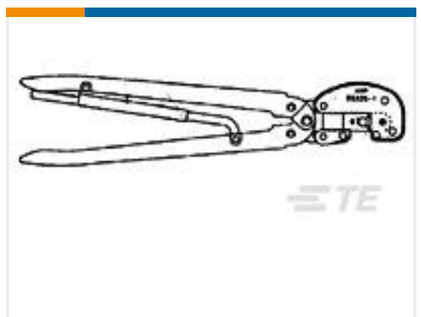

TE Part # 1-59239-4
HHHT PIDG 16-10 HEAD

TE Part # 1SET191002R0000
TET CRIMP-HT

TE Part # 169404
CERTI-LOK DIE

Also in the Series | PIDG

Compression Connectors(17)

Crimp Terminal Housings(1)

Crimp Wire Pins, Tabs & Ferrules(41)

Hand Crimping Tools(2)

Knife Disconnects(11)

PCB Terminals(9)

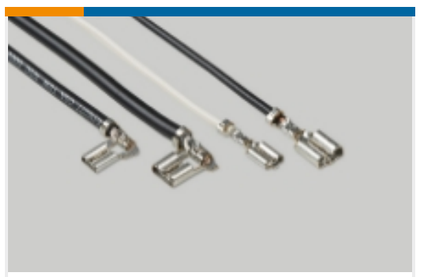

Quick Disconnects(53)

Ring Terminals & Spade Terminals(861)

Special Purpose Terminals(1)

Splices(48)

Documents

Product Drawings

SPLICE BUTT PIDG 12-10/22-18

English

CAD Files

3D PDF

3D

Customer View Model

ENG_CVM_CVM_327639_H.2d_dxf.zip

English

Customer View Model

ENG_CVM_CVM_327639_H.3d_igs.zip

English

Customer View Model

ENG_CVM_CVM_327639_H.3d_stp.zip

English

3D PDF

English

Customer View Model

ENG_CVM_327639_H1.3d_igs.zip

English

Customer View Model

ENG_CVM_327639_H1.3d_stp.zip

English

Customer View Model

ENG_CVM_327639_H1.2d_dxf.zip

English

By downloading the CAD file I accept and agree to the Terms and Conditions of use.

Datasheets & Catalog Pages

PIDG TERMINALS & SPLICES Quick Reference Guide

English

Product Specifications

Application Specification

English

Product Environmental Compliance

MD_327639_06092014741_dmtec

English

MD_327639_06092014741_dmtec

English

Instruction Sheets

Instruction Sheet (U.S.)

English

Agency Approvals

UL Report

English